HANDLES

PENCOM™
PENINSULA COMPONENTS

ABOUT US

Pencom's "Manufactured globally, supplied locally" philosophy provides customers with low cost globally manufacturing, while still offering localized inventory and technical support.

Founded in 1982 by William A. Gardiner, Pencom has been awarded preferred supplier status by many of the worlds largest OEM's and contract manufacturers. The company employs more than 400 people globally and has approximately 145,000 square feet of manufacturing space at its various locations.

ISO certified, Pencom is committed to supplying our customers with quality parts on time. This philosophy transverses the entire Pencom staff from senior management to shipping.

Full-service capabilities in design, engineering and manufacturing, with an innovative ability to supply low-tech components with a high-tech inventory system, sets Pencom apart from its competition. The company offers precision machining, turning, milling, screw machining and stamping for prototypes and high volume production. These processes are used to manufacture captive screws, inserts, latches, spacers, self-clinching nuts and other mechanical hardware, including ejectors and handles. It also produces electro-mechanical components, such as switches and connectors, and thermal management components, such as custom heat sinks, heat pipes and ducting.

With an eye towards the future, Pencom's "Visible Inventory" System, provides customers with the opportunity to view their inventory in "real time." Eliminating the use of manual counting or bar coding.

PENCOM™ PENINSULA COMPONENTS

1300 INDUSTRIAL RD., STE. 21, SAN CARLOS, CA 94070 **PHONE:** 650-593-3288 **FAX:** 650-593-3299 **EMAIL:** SALES@PENCOMSF.COM **WEB:** WWW.PENCOMSF.COM

Rev: 061506

TABLE OF CONTENTS

ROUND INTERNAL THREAD HANDLE

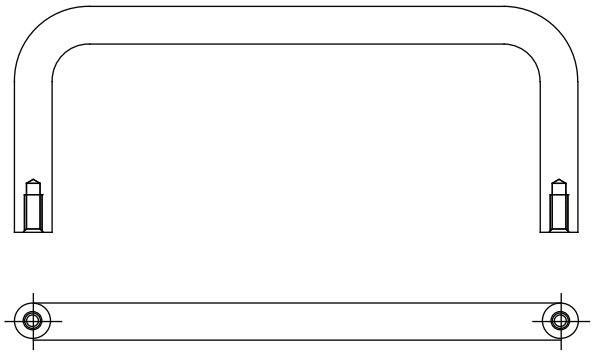

1/8 ROUND INTERNAL THREAD HANDLE..... 4
5/32 ROUND INTERNAL THREAD HANDLE..... 5
3/16 ROUND INTERNAL THREAD HANDLE..... 6
1/4 ROUND INTERNAL THREAD HANDLE..... 7
5/16 ROUND INTERNAL THREAD HANDLE..... 8
3/8 ROUND INTERNAL THREAD HANDLE..... 9
3.2MM ROUND INTERNAL THREAD HANDLE..... 10
4MM ROUND INTERNAL THREAD HANDLE..... 11
5MM ROUND INTERNAL THREAD HANDLE..... 12
6.3MM ROUND INTERNAL THREAD HANDLE..... 13
8MM ROUND INTERNAL THREAD HANDLE..... 14
9.5MM ROUND INTERNAL THREAD HANDLE..... 15

ROUND-OFFSET INTERNAL THREAD HANDLE

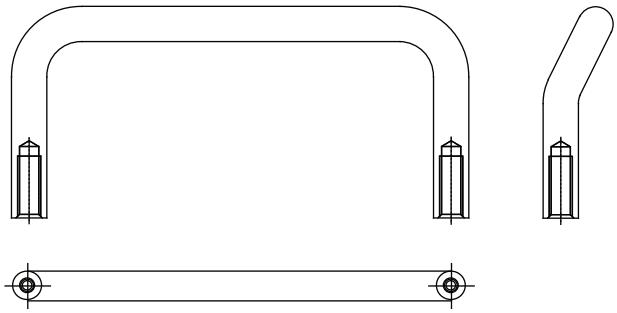

3/16 ROUND-OFFSET INTERNAL THREAD HANDLE..... 16
1/4 ROUND-OFFSET INTERNAL THREAD HANDLE..... 17
5/16 ROUND-OFFSET INTERNAL THREAD HANDLE..... 18
3/8 ROUND-OFFSET INTERNAL THREAD HANDLE..... 19

OVAL INTERNAL THREAD HANDLE

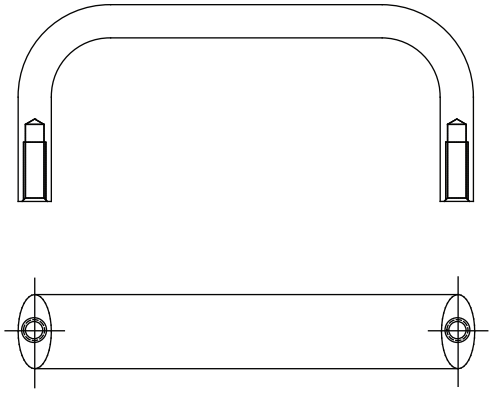

7/16 X 9/32 OVAL INTERNAL THREAD HANDLE..... 20
5/8 X 9/32 OVAL INTERNAL THREAD HANDLE..... 21
11MM X 7MM OVAL INTERNAL THREAD HANDLE..... 22
16MM X 7MM OVAL INTERNAL THREAD HANDLE..... 23

1300 INDUSTRIAL RD., STE. 21, SAN CARLOS, CA 94070 **PHONE:** 650-593-3288 **FAX:** 650-593-3299 **EMAIL:** SALES@PENCOMSF.COM **WEB:** WWW.PENCOMSF.COM

1/8 ROUND INTERNAL THREAD HANDLE

SAMPLE PART NUMBER

3/4x1/2-256-HA-1/8-RD-AL-BLK-ANOD

LENGTH
HEIGHT
THREAD
SERIES
MATERIAL
FINISH

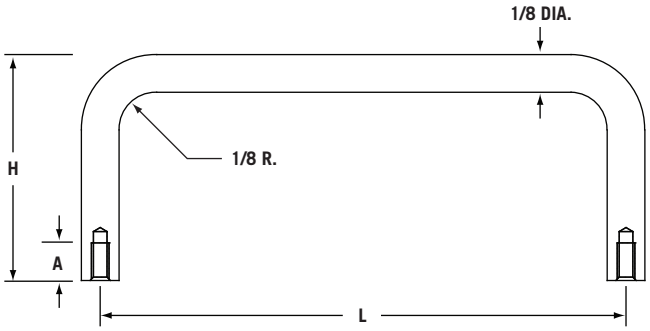

DIMENSIONS:

H ± 1/32	L ± 1/32									
	3/4	13/16	7/8	1	1-1/4	1-1/2	1-3/4	2	2-1/2	3
1/2										
3/4										
1										
1-1/4										
1-1/2										
2										

ALL SIZES AVAILABLE

Thread	A
2-56	3/16

Material Code	Description	Finish	Description
AL	Aluminum	PLN	Plain
AL	Aluminum	AL	Clear
AL	Aluminum	BLK-ANOD	Black Anodize
SS	Stainless Steel	P	Passivate
STL	Steel	Z	Zinc

*Other threads, materials and finishes available upon request.

PENCOM™ PENINSULA COMPONENTS

1300 INDUSTRIAL RD., STE. 21, SAN CARLOS, CA 94070 **PHONE:** 650-593-3288 **FAX:** 650-593-3299 **EMAIL:** SALES@PENCOMSF.COM **WEB:** WWW.PENCOMSF.COM

Rev: 061506

5/32 ROUND INTERNAL THREAD HANDLE

SAMPLE PART NUMBER

2x1-256-HA-5/32-RD-AL-BLK-ANOD

- FINISH
- MATERIAL
- SERIES
- THREAD
- HEIGHT
- LENGTH

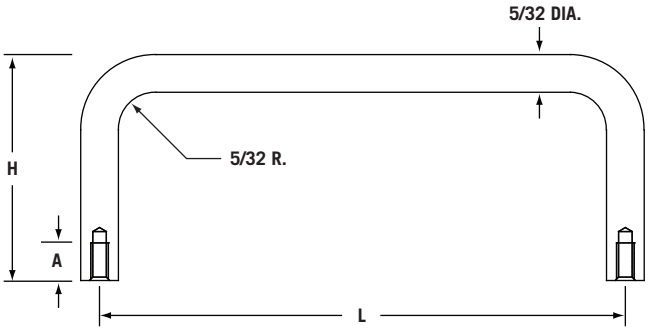

DIMENSIONS:

H ± 1/32	L ± 1/32						
	1	1-1/4	1-1/2	1-3/4	2	2-1/2	3
3/4				ALL SIZES AVAILABLE			
1							

Thread	A
2-56	3/16
4-40	1/4-3-8

Material Code	Description	Finish	Description
AL	Aluminum	PLN	Plain
AL	Aluminum	AL	Clear
AL	Aluminum	BLK-ANOD	Black Anodize
SS	Stainless Steel	P	Passivate
STL	Steel	Z	Zinc

*Other threads, materials and finishes available upon request.

1300 INDUSTRIAL RD., STE. 21, SAN CARLOS, CA 94070 **PHONE:** 650-593-3288 **FAX:** 650-593-3299 **EMAIL:** SALES@PENCOMSF.COM **WEB:** WWW.PENCOMSF.COM

3/16 ROUND INTERNAL THREAD HANDLE

SAMPLE PART NUMBER

1x3/4-632-HA-3/16-RD-AL-BLK-ANOD

LENGTH
HEIGHT
THREAD
SERIES
MATERIAL
FINISH

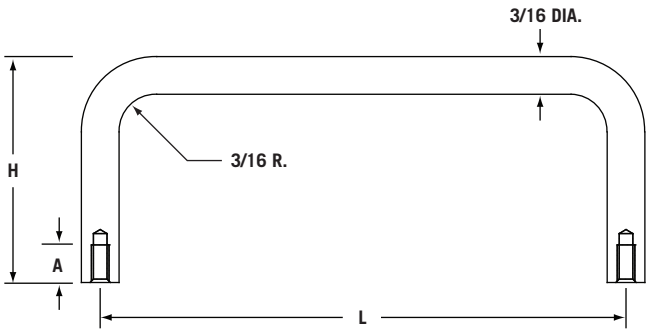

DIMENSIONS:

H ± 1/32	L ± 1/32							
	1	1-1/4	1-1/2	1-3/4	2	3	4	5
5/8								
3/4								
7/8								
1								
1-1/8								
1-1/4								
1-1/2								

ALL SIZES AVAILABLE

Thread	A
4-40	1/4
6-32	5/16 - 3/8

Material Code	Description	Finish	Description
AL	Aluminum	PLN	Plain
AL	Aluminum	AL	Clear
AL	Aluminum	BLK-ANOD	Black Anodize
SS	Stainless Steel	P	Passivate
STL	Steel	Z	Zinc

*Other threads, materials and finishes available upon request.

PENCOM™ PENINSULA COMPONENTS

1300 INDUSTRIAL RD., STE. 21, SAN CARLOS, CA 94070 **PHONE:** 650-593-3288 **FAX:** 650-593-3299 **EMAIL:** SALES@PENCOMSF.COM **WEB:** WWW.PENCOMSF.COM

Rev: 061506

1/4 ROUND INTERNAL THREAD HANDLE

SAMPLE PART NUMBER

3x1-632-HA-1/4-RD-AL-BLK-ANOD

- FINISH
- MATERIAL
- SERIES
- THREAD
- HEIGHT
- LENGTH

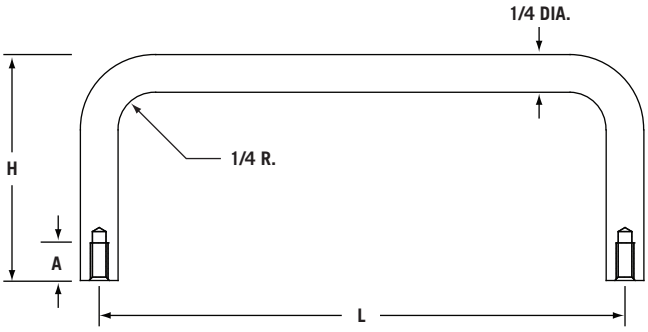

DIMENSIONS:

H ± 1/32	L ± 1/32														
	1-1/8	1-1/4	1-1/2	1-3/4	2	2-1/4	2-1/2	2-3/4	3	3-1/2	4	4-1/4	4-1/2	5	6
1															
1-1/4															
1-1/2															
2															

ALL SIZES AVAILABLE

Material Code	Description	Finish	Description
AL	Aluminum	PLN	Plain
AL	Aluminum	AL	Clear
AL	Aluminum	BLK-ANOD	Black Anodize
SS	Stainless Steel	P	Passivate
STL	Steel	Z	Zinc

*Other threads, materials and finishes available upon request.

Thread	A
6-32	3/8
8/32	7/16 - 9/16

1300 INDUSTRIAL RD., STE. 21, SAN CARLOS, CA 94070 **PHONE:** 650-593-3288 **FAX:** 650-593-3299 **EMAIL:** SALES@PENCOMSF.COM **WEB:** WWW.PENCOMSF.COM

5/16 ROUND INTERNAL THREAD HANDLE

SAMPLE PART NUMBER

3x1-832-HA-5/16-RD-AL-BLK-ANOD

LENGTH
HEIGHT
THREAD
SERIES
MATERIAL
FINISH

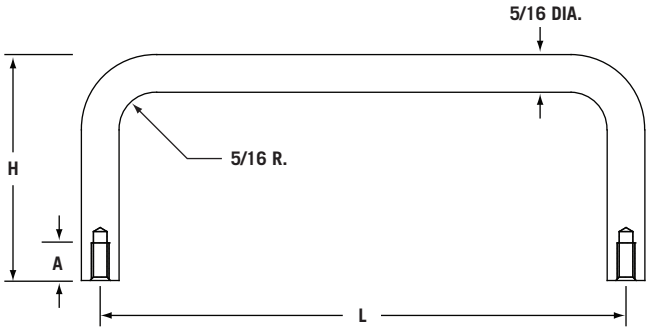

DIMENSIONS:

H ± 1/32	L ± 1/32													
	2	2-1/8	2-1/4	2-3/8	2-1/2	2-3/4	3	3-1/8	3-1/4	3-1/2	4	4-1/4	4-1/2	4-9/16
1														
1-1/8														
1-1/4														
1-5/16														
1-3/8														
1-1/2														
1-3/4														

ALL SIZES AVAILABLE

H ± 1/32	L ± 1/32												
	4-5/8	4-3/4	5	5-1/8	5-1/4	5-1/2	5-3/4	6	6-1/4	6-7/16	6-1/2	6-3/4	7
1													
1-1/8													
1-1/4													
1-5/16													
1-3/8													
1-1/2													
1-3/4													

ALL SIZES AVAILABLE

Material Code	Description	Finish	Description
AL	Aluminum	PLN	Plain
AL	Aluminum	AL	Clear
AL	Aluminum	BLK-ANOD	Black Anodize
SS	Stainless Steel	P	Passivate
STL	Steel	Z	Zinc

*Other threads, materials and finishes available upon request.

Thread	A
8-32	7/16
10-32	5/16 - 5/8

PENCOM PENINSULA COMPONENTS
1300 INDUSTRIAL RD., STE. 21, SAN CARLOS, CA 94070 **PHONE:** 650-593-3288 **FAX:** 650-593-3299 **EMAIL:** SALES@PENCOMSF.COM **WEB:** WWW.PENCOMSF.COM

Rev: 061506

3/8 ROUND INTERNAL THREAD HANDLE

SAMPLE PART NUMBER

3x1-1/2-832-HA-3/8-RD-AL-BLK-ANOD

- FINISH
- MATERIAL
- SERIES
- THREAD
- HEIGHT
- LENGTH

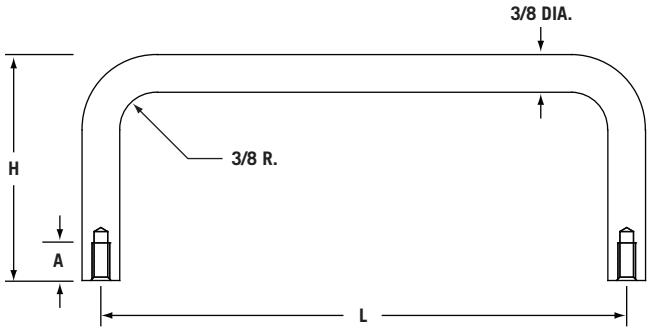

DIMENSIONS:

H ± 1/32	L ± 1/32													
	2	2-1/2	3	3-1/2	4	4-1/4	4-1/2	5	5-1/4	5-1/2	5-3/4	6	6-1/2	7
1-5/16														
1-1/2														
1-3/4														
1-7/8														

ALL SIZES AVAILABLE

Material Code	Description	Finish	Description
AL	Aluminum	PLN	Plain
AL	Aluminum	AL	Clear
AL	Aluminum	BLK-ANOD	Black Anodize
SS	Stainless Steel	P	Passivate
STL	Steel	Z	Zinc

*Other threads, materials and finishes available upon request.

Thread	A
8-32	3/16
10-32	7/16 - 5/8
1/4-20	3/8 - 5/8

1300 INDUSTRIAL RD., STE. 21, SAN CARLOS, CA 94070 **PHONE:** 650-593-3288 **FAX:** 650-593-3299 **EMAIL:** SALES@PENCOMSF.COM **WEB:** WWW.PENCOMSF.COM

3.2MM ROUND INTERNAL THREAD HANDLE

SAMPLE PART NUMBER

21x19-M2.5-HA-3.2MM-RD-AL-BLK-ANOD

LENGTH
HEIGHT
THREAD
SERIES
MATERIAL
FINISH

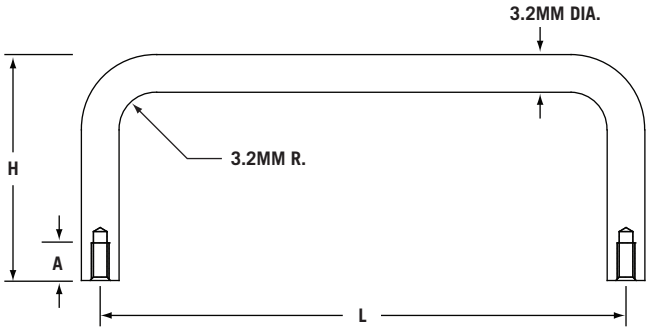

DIMENSIONS:

H ± 1.0	L ± 1.0									
	19	21	22	25	32	38	44	51	63	76
13										
19										
25										
32										
38										
51										

ALL SIZES AVAILABLE

Thread	A
M2.5	5

Material Code	Description	Finish	Description
AL	Aluminum	PLN	Plain
AL	Aluminum	AL	Clear
AL	Aluminum	BLK-ANOD	Black Anodize
SS	Stainless Steel	P	Passivate
STL	Steel	Z	Zinc

*Other threads, materials and finishes available upon request.

PENCOM™ PENINSULA COMPONENTS

1300 INDUSTRIAL RD., STE. 21, SAN CARLOS, CA 94070 **PHONE:** 650-593-3288 **FAX:** 650-593-3299 **EMAIL:** SALES@PENCOMSF.COM **WEB:** WWW.PENCOMSF.COM

Rev: 061506

4MM ROUND INTERNAL THREAD HANDLE

SAMPLE PART NUMBER

21x19-M2.5-HA-4MM-RD-AL-BLK-ANOD

- FINISH
- MATERIAL
- SERIES
- THREAD
- HEIGHT
- LENGTH

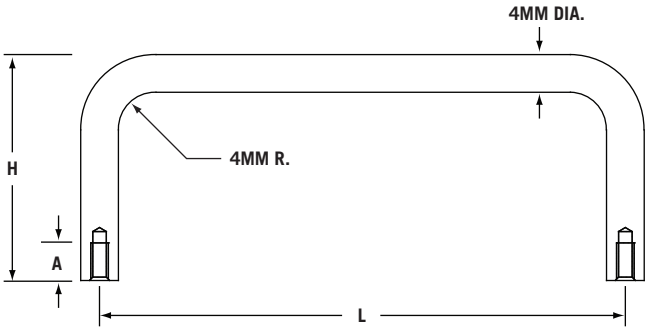

DIMENSIONS:

H ± 1.0	L ± 1.0						
	25	32	38	44	51	63	76
19				ALL SIZES AVAILABLE			
25							

Thread	A
M2.5	5
M3	6 - 10

Material Code	Description	Finish	Description
AL	Aluminum	PLN	Plain
AL	Aluminum	AL	Clear
AL	Aluminum	BLK-ANOD	Black Anodize
SS	Stainless Steel	P	Passivate
STL	Steel	Z	Zinc

*Other threads, materials and finishes available upon request.

1300 INDUSTRIAL RD., STE. 21, SAN CARLOS, CA 94070 **PHONE:** 650-593-3288 **FAX:** 650-593-3299 **EMAIL:** SALES@PENCOMSF.COM **WEB:** WWW.PENCOMSF.COM

5MM ROUND INTERNAL THREAD HANDLE

SAMPLE PART NUMBER

25x22-M3-HA-5MM-RD-AL-BLK-ANOD

LENGTH
HEIGHT
THREAD
SERIES
MATERIAL
FINISH

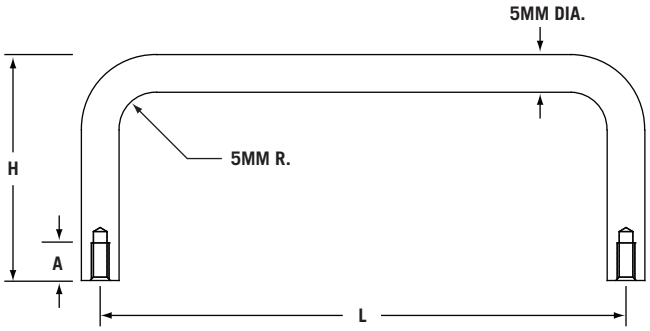

DIMENSIONS:

H ± 1.0	L ± 1.0							
	25	32	38	44	51	76	102	127
16								
19								
22								
25								
29								
32								
38								

ALL SIZES AVAILABLE

Thread	A
M3	6
M3.5	8-10

Material Code	Description	Finish	Description
AL	Aluminum	PLN	Plain
AL	Aluminum	AL	Clear
AL	Aluminum	BLK-ANOD	Black Anodize
SS	Stainless Steel	P	Passivate
STL	Steel	Z	Zinc

*Other threads, materials and finishes available upon request.

PENCOM™ PENINSULA COMPONENTS

1300 INDUSTRIAL RD., STE. 21, SAN CARLOS, CA 94070 **PHONE:** 650-593-3288 **FAX:** 650-593-3299 **EMAIL:** SALES@PENCOMSF.COM **WEB:** WWW.PENCOMSF.COM

Rev: 061506

6.3MM ROUND INTERNAL THREAD HANDLE

SAMPLE PART NUMBER

32x25-M3.5-HA-6.3MM-RD-AL-BLK-ANOD

- FINISH
- MATERIAL
- SERIES
- THREAD
- HEIGHT
- LENGTH

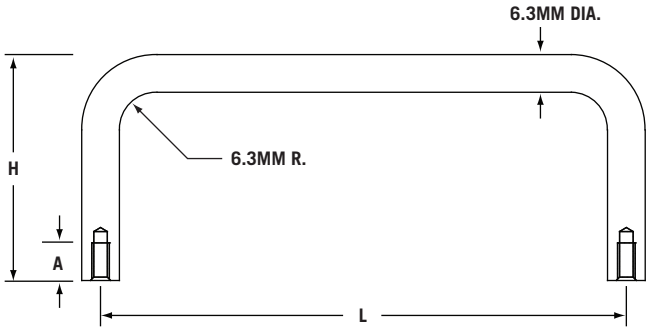

DIMENSIONS:

H ± 1.0	L ± 1.0													
	32	38	44	51	57	63	70	76	89	102	108	114	127	152
25														
32														
38														
51														

ALL SIZES AVAILABLE

Material Code	Description	Finish	Description
AL	Aluminum	PLN	Plain
AL	Aluminum	AL	Clear
AL	Aluminum	BLK-ANOD	Black Anodize
SS	Stainless Steel	P	Passivate
STL	Steel	Z	Zinc

*Other threads, materials and finishes available upon request.

Thread	A
M3.5	10
M4	11 - 14

1300 INDUSTRIAL RD., STE. 21, SAN CARLOS, CA 94070 **PHONE:** 650-593-3288 **FAX:** 650-593-3299 **EMAIL:** SALES@PENCOMSF.COM **WEB:** WWW.PENCOMSF.COM

8MM ROUND INTERNAL THREAD HANDLE

SAMPLE PART NUMBER

51x25-M5-HA-8MM-RD-AL-BLK-ANOD

LENGTH
HEIGHT
THREAD
SERIES
MATERIAL
FINISH

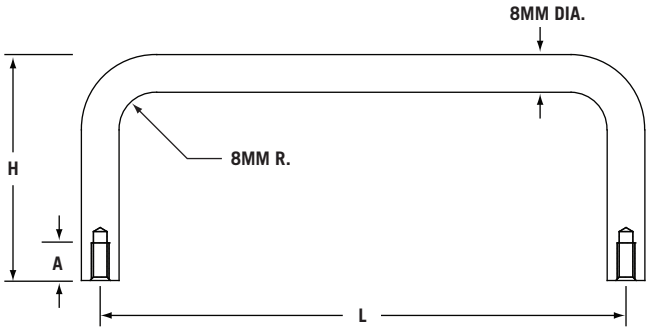

DIMENSIONS:

H ± 1.0	L ± 1.0													
	51	54	57	60	63	70	76	79	83	89	102	108	114	116
25														
29														
32														
33														
35														
38														
44														

ALL SIZES AVAILABLE

H ± 1.0	L ± 1.0								
	118	127	133	140	146	152	163	165	178
25									
29									
32									
33									
35									
38									
51									

ALL SIZES AVAILABLE

Material Code	Description	Finish	Description
AL	Aluminum	PLN	Plain
AL	Aluminum	AL	Clear
AL	Aluminum	BLK-ANOD	Black Anodize
SS	Stainless Steel	P	Passivate
STL	Steel	Z	Zinc

*Other threads, materials and finishes available upon request.

Thread	A
M4	11
M5	8 - 16

PENCOM PENINSULA COMPONENTS
1300 INDUSTRIAL RD., STE. 21, SAN CARLOS, CA 94070 **PHONE:** 650-593-3288 **FAX:** 650-593-3299 **EMAIL:** SALES@PENCOMSF.COM **WEB:** WWW.PENCOMSF.COM

Rev: 061506

9.5MM ROUND INTERNAL THREAD HANDLE

SAMPLE PART NUMBER

51x33-M4-HA-9.5MM-RD-AL-BLK-ANOD

- FINISH
- MATERIAL
- SERIES
- THREAD
- HEIGHT
- LENGTH

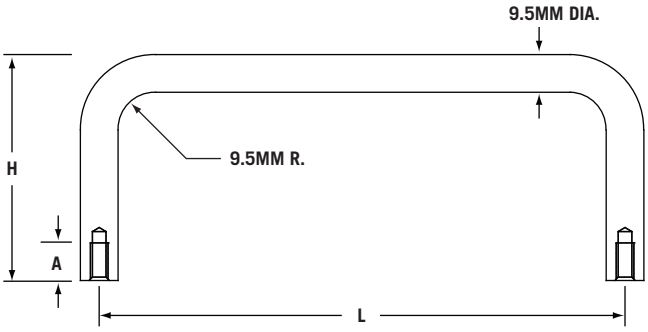

DIMENSIONS:

H ± 1.0	L ± 1.0													
	51	63	76	89	102	108	114	127	133	140	146	152	165	178
33														
38														
44														
48														

ALL SIZES AVAILABLE

Material Code	Description	Finish	Description
AL	Aluminum	PLN	Plain
AL	Aluminum	AL	Clear
AL	Aluminum	BLK-ANOD	Black Anodize
SS	Stainless Steel	P	Passivate
STL	Steel	Z	Zinc

*Other threads, materials and finishes available upon request.

Thread	A
M4	11
M5	11 - 16
M6	10 -16

1300 INDUSTRIAL RD., STE. 21, SAN CARLOS, CA 94070 **PHONE:** 650-593-3288 **FAX:** 650-593-3299 **EMAIL:** SALES@PENCOMSF.COM **WEB:** WWW.PENCOMSF.COM

3/16 ROUND-OFFSET INTERNAL THREAD HANDLE

SAMPLE PART NUMBER

3x1-632-HA-3/16-RD-OFST-AL-BLK-ANOD

LENGTH
HEIGHT
THREAD
SERIES
MATERIAL
FINISH

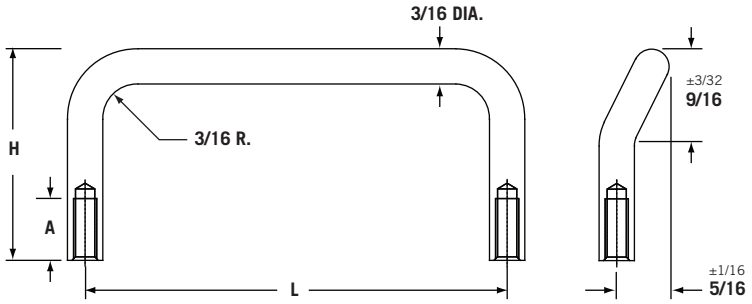

DIMENSIONS:

H ± 1/32	L ± 1/32					
	2	3	4	4-1/2	5	6
1			ALL SIZES AVAILABLE			
1-1/2						

Thread	A
4-40	1/4 - 5/16
6-32	1/4 - 3/8

Material Code	Description	Finish	Description
AL	Aluminum	PLN	Plain
AL	Aluminum	AL	Clear
AL	Aluminum	BLK-ANOD	Black Anodize
SS	Stainless Steel	P	Passivate
STL	Steel	Z	Zinc

*Other threads, materials and finishes available upon request.

PENCOM™ PENINSULA COMPONENTS

1300 INDUSTRIAL RD., STE. 21, SAN CARLOS, CA 94070 **PHONE:** 650-593-3288 **FAX:** 650-593-3299 **EMAIL:** SALES@PENCOMSF.COM **WEB:** WWW.PENCOMSF.COM

Rev: 061506

1/4 ROUND-OFFSET INTERNAL THREAD HANDLE

SAMPLE PART NUMBER

3x1-632-HA-1/4-RD-OFST-AL-BLK-ANOD

- FINISH
- MATERIAL
- SERIES
- THREAD
- HEIGHT
- LENGTH

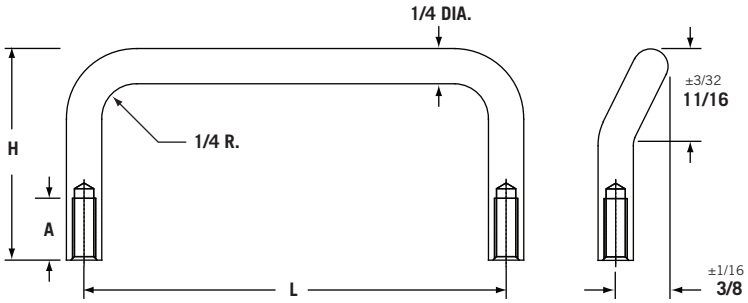

DIMENSIONS:

H ± 1/32	L ± 1/32						
	2	3	4	4-1/2	5	5-1/2	6
1							
1-1/2							
2							

ALL SIZES AVAILABLE

Thread	A
6-32	5/16 - 7/16
8-32	5/16 - 7/16

Material Code	Description	Finish	Description
AL	Aluminum	PLN	Plain
AL	Aluminum	AL	Clear
AL	Aluminum	BLK-ANOD	Black Anodize
SS	Stainless Steel	P	Passivate
STL	Steel	Z	Zinc

*Other threads, materials and finishes available upon request.

1300 INDUSTRIAL RD., STE. 21, SAN CARLOS, CA 94070 **PHONE:** 650-593-3288 **FAX:** 650-593-3299 **EMAIL:** SALES@PENCOMSF.COM **WEB:** WWW.PENCOMSF.COM

5/16 ROUND-OFFSET INTERNAL THREAD HANDLE

SAMPLE PART NUMBER

3x1-5/16-832-HA-5/16-RD-OFST-AL-BLK-ANOD

LENGTH
HEIGHT
THREAD
SERIES
MATERIAL
FINISH

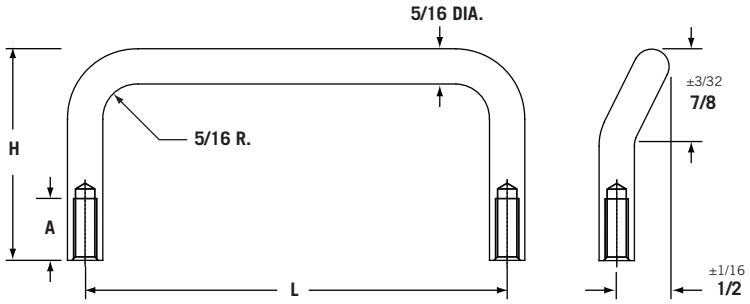

DIMENSIONS:

H ± 1/32	L ± 1/32									
	2	2-1/2	3	4	4-1/4	4-1/2	4-9/16	5	5-1/2	6
1-5/16										
1-1/2										
1-3/4										

ALL SIZES AVAILABLE

Thread	A
8-32	5/16 - 7/16
10-32	5/16 - 1/2

Material Code	Description	Finish	Description
AL	Aluminum	PLN	Plain
AL	Aluminum	AL	Clear
AL	Aluminum	BLK-ANOD	Black Anodize
SS	Stainless Steel	P	Passivate
STL	Steel	Z	Zinc

*Other threads, materials and finishes available upon request.

PENCOM™ PENINSULA COMPONENTS

1300 INDUSTRIAL RD., STE. 21, SAN CARLOS, CA 94070 **PHONE:** 650-593-3288 **FAX:** 650-593-3299 **EMAIL:** SALES@PENCOMSF.COM **WEB:** WWW.PENCOMSF.COM

Rev: 061506

3/8 ROUND-OFFSET INTERNAL THREAD HANDLE

SAMPLE PART NUMBER

3x1-3/4-832-HA-3/8-RD-OFST-AL-BLK-ANOD

- FINISH
- MATERIAL
- SERIES
- THREAD
- HEIGHT
- LENGTH

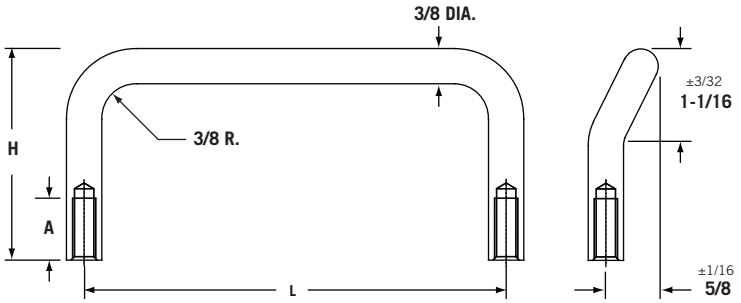

DIMENSIONS:

H ± 1/32	L ± 1/32							
	3	4	4-1/4	4-1/2	4-9/16	5	5-1/2	6
1-3/4				ALL SIZES AVAILABLE				
2								

Thread	A
8-32	5/16 - 7/16
10-32	1/2 - 9/16

Material Code	Description	Finish	Description
AL	Aluminum	PLN	Plain
AL	Aluminum	AL	Clear
AL	Aluminum	BLK-ANOD	Black Anodize
SS	Stainless Steel	P	Passivate
STL	Steel	Z	Zinc

*Other threads, materials and finishes available upon request.

1300 INDUSTRIAL RD., STE. 21, SAN CARLOS, CA 94070 **PHONE:** 650-593-3288 **FAX:** 650-593-3299 **EMAIL:** SALES@PENCOMSF.COM **WEB:** WWW.PENCOMSF.COM

7/16 x 9/32 OVAL INTERNAL THREAD HANDLE

SAMPLE PART NUMBER

2x1-832-HA-7/16-OV-AL-BLK-ANOD

LENGTH
HEIGHT
THREAD
SERIES
MATERIAL
FINISH

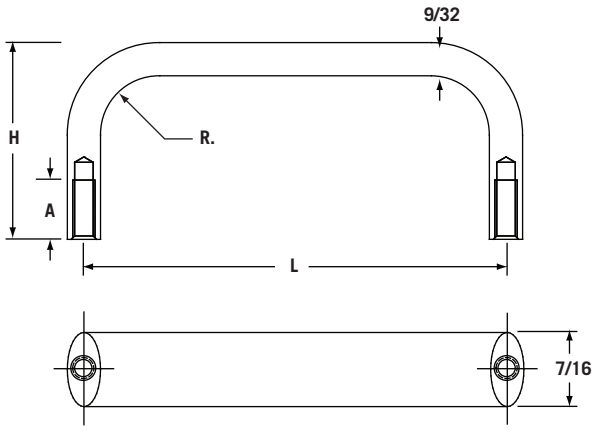

DIMENSIONS:

H ± 1/32	L ± 1/32											
	2	2-1/4	2-1/2	3	3-1/2	4	4-1/4	4-1/2	4-9/16	5	6	6-7/16
1												
1-9/32												
1-1/2												

ALL SIZES AVAILABLE

Material Code	Description	Finish	Description
AL	Aluminum	PLN	Plain
AL	Aluminum	AL	Clear
AL	Aluminum	BLK-ANOD	Black Anodize
SS	Stainless Steel	P	Passivate
STL	Steel	Z	Zinc

*Other threads, materials and finishes available upon request.

Thread	A
8-32	5/16 - 1/2
10-24	5/16 - 5/8
10-32	5/16 - 5/8

PENCOM™ PENINSULA COMPONENTS

1300 INDUSTRIAL RD., STE. 21, SAN CARLOS, CA 94070 **PHONE:** 650-593-3288 **FAX:** 650-593-3299 **EMAIL:** SALES@PENCOMSF.COM **WEB:** WWW.PENCOMSF.COM

Rev: 061506

5/8 x 9/32 OVAL INTERNAL THREAD HANDLE

SAMPLE PART NUMBER

3x1-832-HA-5/8-OV-AL-BLK-ANOD

- FINISH
- MATERIAL
- SERIES
- THREAD
- HEIGHT
- LENGTH

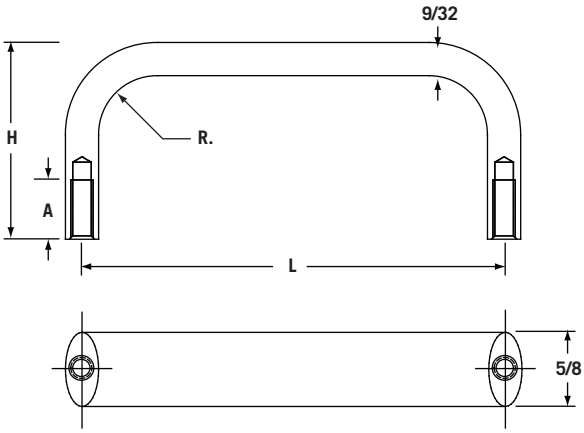

DIMENSIONS:

H ± 1/32	L ± 1/32										
	2-1/2	3	4	4-1/4	4-1/2	4-9/16	5	5-1/2	6	6-7/16	7
1											
1-9/32											
1-1/2											
1-3/4											

ALL SIZES AVAILABLE

Material Code	Description	Finish	Description
AL	Aluminum	PLN	Plain
AL	Aluminum	AL	Clear
AL	Aluminum	BLK-ANOD	Black Anodize
SS	Stainless Steel	P	Passivate
STL	Steel	Z	Zinc

*Other threads, materials and finishes available upon request.

Thread	A
8-32	5/16 - 5/8
10-24	5/16 - 5/8
10-32	5/16 - 5/8

1300 INDUSTRIAL RD., STE. 21, SAN CARLOS, CA 94070 **PHONE:** 650-593-3288 **FAX:** 650-593-3299 **EMAIL:** SALES@PENCOMSF.COM **WEB:** WWW.PENCOMSF.COM

11MM x 7MM OVAL INTERNAL THREAD HANDLE

SAMPLE PART NUMBER

51x33-M4-HA-11MM-OV-AL-BLK-ANOD

LENGTH
HEIGHT
THREAD
SERIES
MATERIAL
FINISH

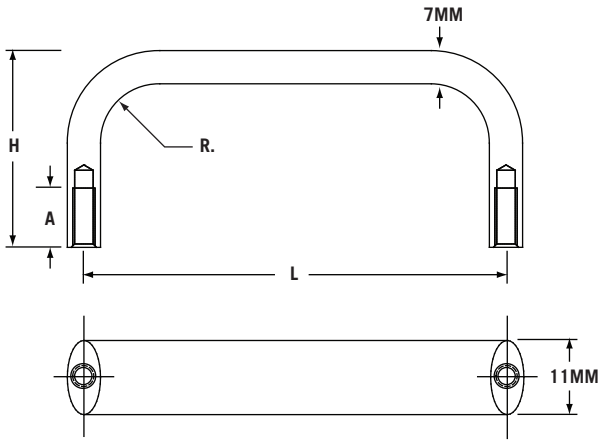

DIMENSIONS:

H ± 1.0	L ± 1.0											
	51	57	63	76	89	102	108	114	116	127	152	163
25												
33						ALL SIZES AVAILABLE						
38												

Material Code	Description	Finish	Description
AL	Aluminum	PLN	Plain
AL	Aluminum	AL	Clear
AL	Aluminum	BLK-ANOD	Black Anodize
SS	Stainless Steel	P	Passivate
STL	Steel	Z	Zinc

*Other threads, materials and finishes available upon request.

Thread	A
M4	11
M5	11 - 16
M6	10 - 16

PENCOM™ PENINSULA COMPONENTS

1300 INDUSTRIAL RD., STE. 21, SAN CARLOS, CA 94070 **PHONE:** 650-593-3288 **FAX:** 650-593-3299 **EMAIL:** SALES@PENCOMSF.COM **WEB:** WWW.PENCOMSF.COM

Rev: 061506

16MM x 7MM OVAL INTERNAL THREAD HANDLE

SAMPLE PART NUMBER

63x33-M4-HA-16MM-OV-AL-BLK-ANOD

- FINISH
- MATERIAL
- SERIES
- THREAD
- HEIGHT
- LENGTH

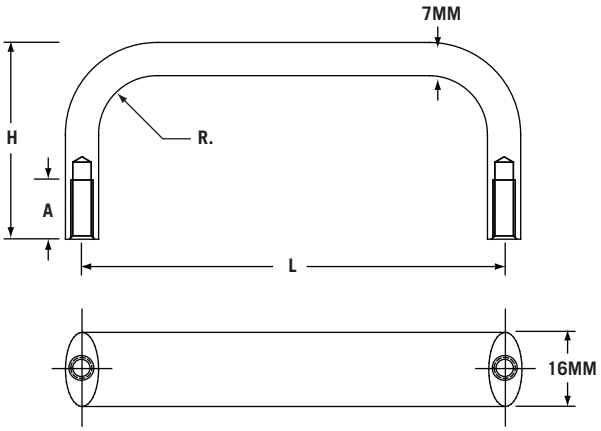

DIMENSIONS:

H ± 1.0	L ± 1.0									
	63	76	102	108	114	116	127	152	163	178
25										
33										
38										
44										

ALL SIZES AVAILABLE

Material Code	Description	Finish	Description
AL	Aluminum	PLN	Plain
AL	Aluminum	AL	Clear
AL	Aluminum	BLK-ANOD	Black Anodize
SS	Stainless Steel	P	Passivate
STL	Steel	Z	Zinc

*Other threads, materials and finishes available upon request.

Thread	A
M4	11
M5	11 - 16

1300 INDUSTRIAL RD., STE. 21, SAN CARLOS, CA 94070 **PHONE:** 650-593-3288 **FAX:** 650-593-3299 **EMAIL:** SALES@PENCOMSF.COM **WEB:** WWW.PENCOMSF.COM

SALES ★

HEADQUARTERS ★
1300 Industrial Road Suite 21
San Carlos, CA 94070
(650) 593-3288 - phone
(650) 593-3299 - fax

FLORIDA
11801-1 28th Street North
St. Petersburg, FL 33716
(727) 571 - 1641 - phone
(727) 571 - 3460 - fax

LAS VEGAS
6380 South Valley View Blvd Suite 240
Las Vegas, NV 89118

TUCSON
2104 North Forbes Ste. 105
Tucson, AZ 85745
(520) 624-1100 - phone
(520) 624-5595 - fax

MEXICO
Camino AL ITESO #8499-1
Colonia El Mante, Tlaquepaque
Guadalajara, Jalisco C.P.
45080, Mexico
52-33-3133-3925 - phone
52-33-3133-3928 - fax

HONG KONG
Unit 2301, Nanyang Plaza
57 Hung To Road,
Kwun Tong, Kowloon Hong Kong
(852) 2994-6183 - phone
(852) 2172-6233 - fax

SHANGHAI
Room 3A Block 12 No.55 XIYa Road
Waigaoqiao Free Trade Zone Pudong
Shanghai 200131
86 21-50462738 - phone
86 21-50462726 - fax

NORTHERN CALIFORNIA
11353 Sunrise Gold Circle Unit G
Rancho Cordova, CA 95742
(916) 858-1065 - phone
(916) 858 - 1070 - fax

NEW ENGLAND
6 Raymond Ave. Unit 5B
Salem, NH 03079
(603) 893 - 8006 - phone
(603) 893 - 8005 - fax

DALLAS
1107-A South Airport Circle
Euless, TX 76040
(817) 354-1200 - phone
(817) 354-1207 - fax

NORTH CAROLINA
Charlotte, NC 28262
(704) 509-8924 - phone
(704) 509-7912 - fax

ENGLAND
Building 63, Bay 4,
The Pensnett Estate,
Third Avenue, Kingswinford,
West Midlands, DY6 7XU
44-1384-295095 - phone
44-1384-295097 - fax

TAIWAN
3F, No.23, Lane 59, Li Ming Rd.
Shin Dian City 231
Taipei County, Taiwan, R. O. C
886-2-22131762 - phone
886-2-22131563 - fax

SINGAPORE
629 Aljunied Road #06-21
Cititech Industrial Building
Singapore, 389838
65-6749-6183 - phone
65-6749-4948 - fax

SOUTHERN CALIFORNIA
1300 Pioneer St. Suite I
Brea, CA 92821
(562) 694-4477 - phone
(562) 694-8840 - fax

TEXAS
10321-C Burnet Road
Austin, TX 78758
(512) 833-0065 - phone
(512) 833-0068 - fax

INTERVALE
10 Pierce Rd.
Intervale, NH 03845
(603) 867-3172 - phone
(603) 356-6577 - fax

VANCOUVER
Vancouver, WA 98682
(360) 904-2118 - phone
(360) 883-9288 - fax

PENANG
48A, Jalan Todak 4,
Pusat Perniagaan Bandar,
Seberang Jaya,
13700 , Prai, Penang, Malaysia.
604-390-2033 - phone
604-399-4033 - fax

CANADA
Woodstock, ON N4S 4S6, Canada
(727) 571-1641 - phone
(727) 571-3460 - fax

MANUFACTURING ★

CHINA - *4 Sites*
No.143, Sanjiang Industrial Area
Hengli Town Dongguan, China
86-769-3798700 - phone
86-769-3798702 - fax

CAMARILLO
850 Calle Plano , Unit K
Camarillo , CA 93012
(805) 484-9611 - phone
(805) 484-0079 - fax

GUADALAJARA
Camino AL ITESO #8499-1
Colonia El Mante, Tlaquepaque
Guadalajara, Jalisco C.P.
45080, Mexico
52-33-3133-3925 - phone
52-33-3133-3928 - fax

NOGALES
Calzada del Raquet #46
Fraccionamiento California
Nogales, Sonora 84000
52-631-319-1485 - phone
52-631-319-1486 - fax

HAYWARD
2729 Cavanagh Court
Hayward , CA 94545
(510) 785-5022 - phone
(510) 785-3893 - fax

TAIWAN - *2 Sites*
(852) 2994-6183 - phone
(852) 2172-6233 - fax